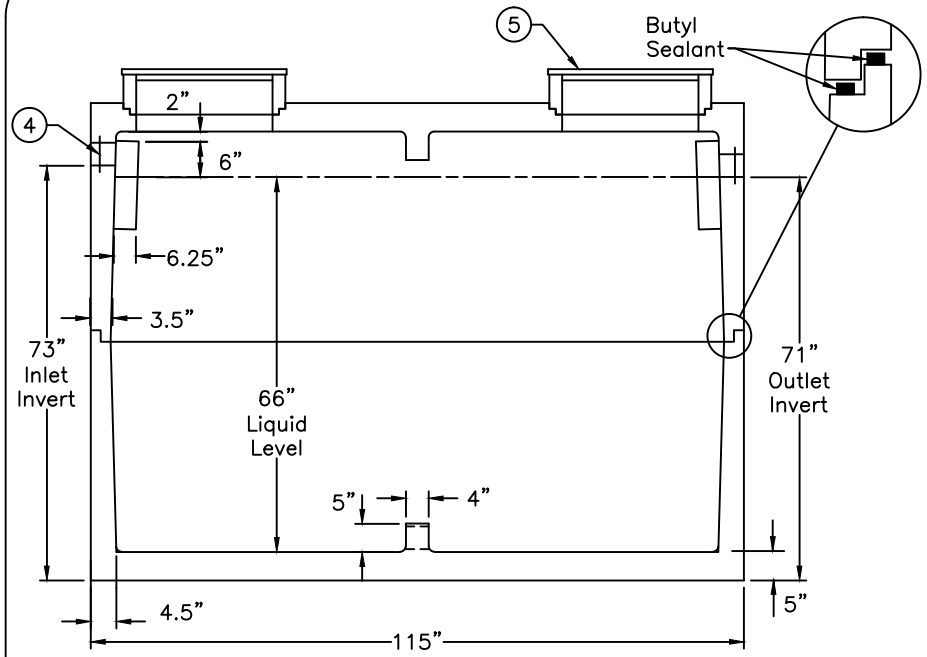

SECTION A–A

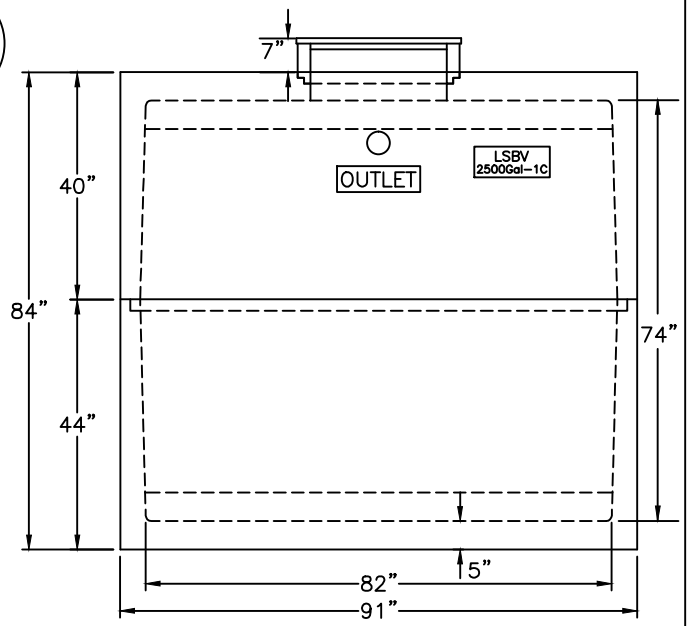

END VIEW

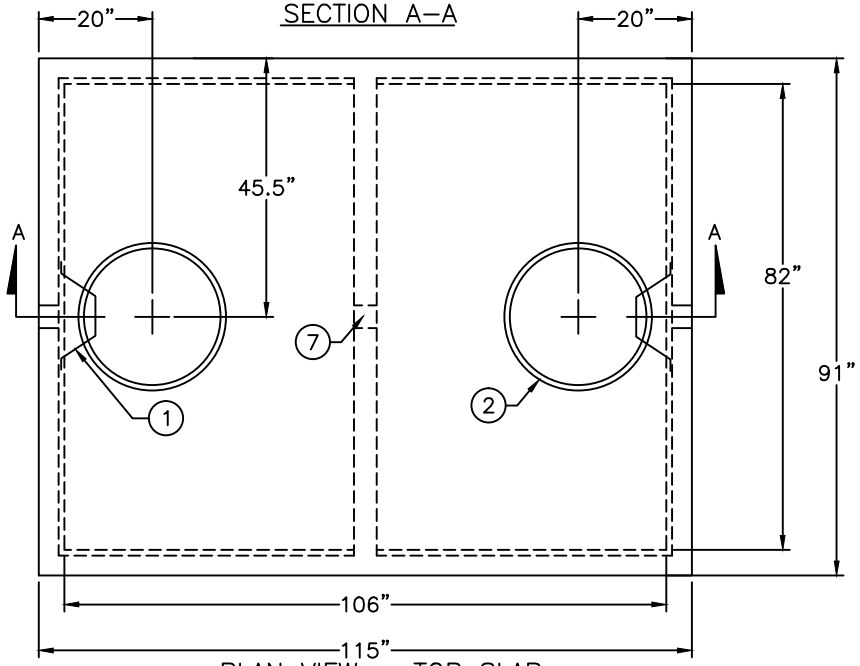

NOT TO SCALE

PLAN VIEW – TOP SLAB

Item No	Description
1	Tank Baffle– HDPE
2	Riser – 24" Dia.
3	Boss Stop
4	4" Dia. Resilent Connector
5	Manhole Cover
6	Tank Baffle – PVC
7	4" Dia. Pass– Thru

Specifications

Concrete: Minimum Compressive Strength is 5,000 PSI @ 28 Days.

Reinforcing: Primary reinforcement will be cover, side and bottom- #4 Rebar (Grade 60).

Sealant: Butyl Sealant used in the seam of the tank and risers will meet or exceed ASTM C990.

Inlet Opening: 4" Diameter- Standard
Outlet Opening: 4" Diameter- Standard

Both openings are fitted with a Pipe-to Structure Resilient Connector which meets or exceeds ASTM C1644.

Earth Cover: Minimum 2' to Maximum 8'.

Design Data: Design per ASTM C1227. Consult Lake Shore Burial Vault if traffic rating (H2O) is required.

Installation: There shall be a minimum bedding of 4" of washed sand or stone less than 1" in size in soil terrain and 8" bedding in rock terrain. Backfilling around tanks with material describe above is suggested when cover is 4' or greater.

Tank Warranty: All tanks are warranted against defective materials and / or workmanship for One year from the date of delivery when installed with manufacturer's instructions. Should a defect appear within the warranty period, Lake Shore Burial Vault Company will supply a new tank in replacement thereof. Lake Shore Burial Vault Company's liability is limited to the value of the tank itself and specifically excludes the cost of installation and/or removal and any subsequent damages. Failure to follow installation procedures and general notes will void the warranty.

Lake Shore Burial Vault Co., Inc
12780 W. Lisbon Road
Brookfield, WI 53005
Phone: 262.781.6262 **Fax:** 262.781.6280
www.lsburialvaults.com

General Notes:

This drawing is the property of Lake Shore Burial Vault Company and shall not be copied or submitted without the consent of this company. All vertical measurements are accurate within +/- 1" on the tank.

Model: 2,500 Gallon, Single Compartment, Mid–Seam Tank

Drawn By: MR **Date:** 5–9–18 **Septic Tank:** 10,400 Gal. **Holding Tank:** 8,720 Gal. **GPI:** 38.58

Approx Weight: 8,673 lbs – T, 9,220 lbs – B **Dwg. No:** 02500.00S